INDUSTRY

V30

VacuumFiltration Unit

Highly efficient deaeration and drying of power transformer oils

C.C.JENSEN

C.C.Jensen A/S * Løvholmen 13 * DK-5700 Svendborg * Denmark
Phone: +45 63 21 20 14 * Fax: +45 62 22 46 15
E-mail: filter@cjc.dk * Homepage: www.cjc.dk

Distributor

Oil Solutions

Phone 0421 336 009
Fax 03 9012 4332

International

Phone 61 421 336 009
Fax 61 3 9012 4332

sales@oilsolutions.com.au
www.oilsolutions.com.au

PO Box 653 Castlemaine Australia 3450

Continuous de-gasing of transformers

The ageing speed of the cellulose isolation material is what determines the length of the life of a transformer.

The ageing speed is affected by three main factors:

1. The presence of oxygen. Ageing is caused by the oxidation process and thus depending on the accessability of oxygen.
   Oxygen is introduced into the transformer through the venting pipe of the expansion reservoir.

2. The presence of water. Water is one of the end products of cellulose and oil ageing processes and is generated in vast quantities inside transformers. Over 99% of dissolved water in a transformer is bound in the cellulose - which, incidently, is where it harms it the most.

3. The presence of acids. Acids are formed one certain steps of the chain of reactions in the oxidation process of the oil, leading to the end-products CO^2 and water. As the oil is "surrounding" the cellulose it is inevitable that the cellulose is effected by the acids formed in the oil.

De-gasing has a positive effect on two of the above factors.

Function

The CJC™ Vacuum Filtration Unit (de-gasing unit) consists of a vacuum chamber and a filtration insert. A vacuum pump maintains the pressure in the chamber at the lowest possible level. At such low pressure even water turns into a gas and the gas content of the oil is radically reduced during its stay in the vacuum chamber.
When the oil is pumped back into the transformer it is absolutely dry. The water content is very close to 0 ppm. The water content of the oil is in equilibrium with the water content of the cellulose. Consequently, when the oil is dried, water will transfer from the cellulose to the oil in order to maintain the equilibrium.

The water starts to travel through the cellulose via the oil bordering surface into the oil phase. The travelling speed of the water in the cellulose can only be influenced by one factor: the temperature. That is why all de-gasing (de-hydration) should be performed while the transformer is in operation. The speed of dehydration is affected by the travelling speed of the water through the cellulose - hence, the dehydration must be allowed ample time. The longer time a dehydration process is allowed, the better the result, which is why continuous de-gasing is very advantageous.

When the acid contents are reduced the ageing speed of the cellulose and of the oil is reduced accordingly. As an immediate consequence the generation of water is minimized which, in turn, reduces the water content of the cellulose.

De-gasing removes previously generated water from the cellulose, leading to a further increase of the remaining life length.

De-gasing also increases the chargeability of the transformer, enabling higher power outputs of no (negative) consequence to the service life length.

Gas Analyses

Modern techniques enable new diagnostic methods where gas analyses are performed on the gases *withdrawn* from the oil. When the de-gasing has been going on sufficiently long, the withdrawn gasses represents the processes that have taken place in the transformer within a relatively short period of time. Hence, a more exact information about the condition of the transformer is achieved.

If the gas formation increases drastically a gas-flow-detector can initiate an alarm condition and shut down the transformer. This new type of protective device will have a considerably quicker response than the traditional Bucholz relay, constituting an increased safety level for the owner.

Conclusion
In short, the continuous de-gasing with a CJC™ Vacuum Filtration Unit enables an extension of the length of remaining service life of a transformer by a factor 2 to 10 (depending on the operating conditions of the transformer).

The continuous de-gasing also enables more exact diagnostics of the transformer condition and also a possibility of improved alarm functions.

The CJC™ Unit

By PLC controlling the operation of the CJC™ Vacuum Filter Unit a very high degree of efficiency is achieved. The vacuum system and the oil discharge circuit are constantly interacting to assure maximum vacuum effect. In order to ensure that solid particles are retained from the fluid, a CJC™ Fine Filter Insert is built into the vaccum unit.

The whole unit is designed to require an absolute minmum of maintenance and surveillance. It can be left virtually unattended for months, cleansing, for example the oil on remotely situated transformer units.

The *capacity* of the unit is 200 litres of oil per hour and tests indicate that it will maintain water contents in transformer oils at levels below 10 ppm.

The below are test results from a transformer unit at the Copenhagen Light and Power Company.

The "water content oil" samples were taken at the bottom of the transformer, whereas the "water after vacuum" samples were drawn at a sampling point at the outlet of the CJC™ Unit.

The "water content paper" are theoretical values based on an equation presuming a certain balance between water content in the oil and in the paper (isolating material). As long as the vacuum treatment is ongoing this balance is partly disturbed, which is why the figures must not be considered absolute.

Date	Temp. bottom [Cº]	Temp. top [Cº]	Water content oil [ppm]	Water content paper [%]	Water after vacuum [ppm]
30.09.99	20	44	18	2,9	
25.10.99	35	53	21	2,6	
03.11.99	39	59	24	2,2	
12.11.99	33	54	17	2,2	12
22.11.99	30	50	16	2,7	
30.11.99	39	55	14	1,9	8
08.12.99	36	56	14	1,9	8
17.12.99	33	52	9	1,7	7
28.12.99	28	52	10	1,7	8
06.01.00	34	54	12	1,8	6
21.01.00	31	50	11		6
27.01.00	36	52	11		7
07.02.00	37	55	10		6
23.02.00	29	50	7		4
23.02.00*	29	50	6	1,5	3
15.12.01	12	18	4		3
08.01.01	27	48	4		4

Analysis by Copenhagen Light & Power

*) After calibration of analysis equipment.

When looking at the figures above, it must also be considered that the vacuum unit was adjusted and operations tested during the testing period.

V30

VacuumFiltration Unit

Flow & Working Principle

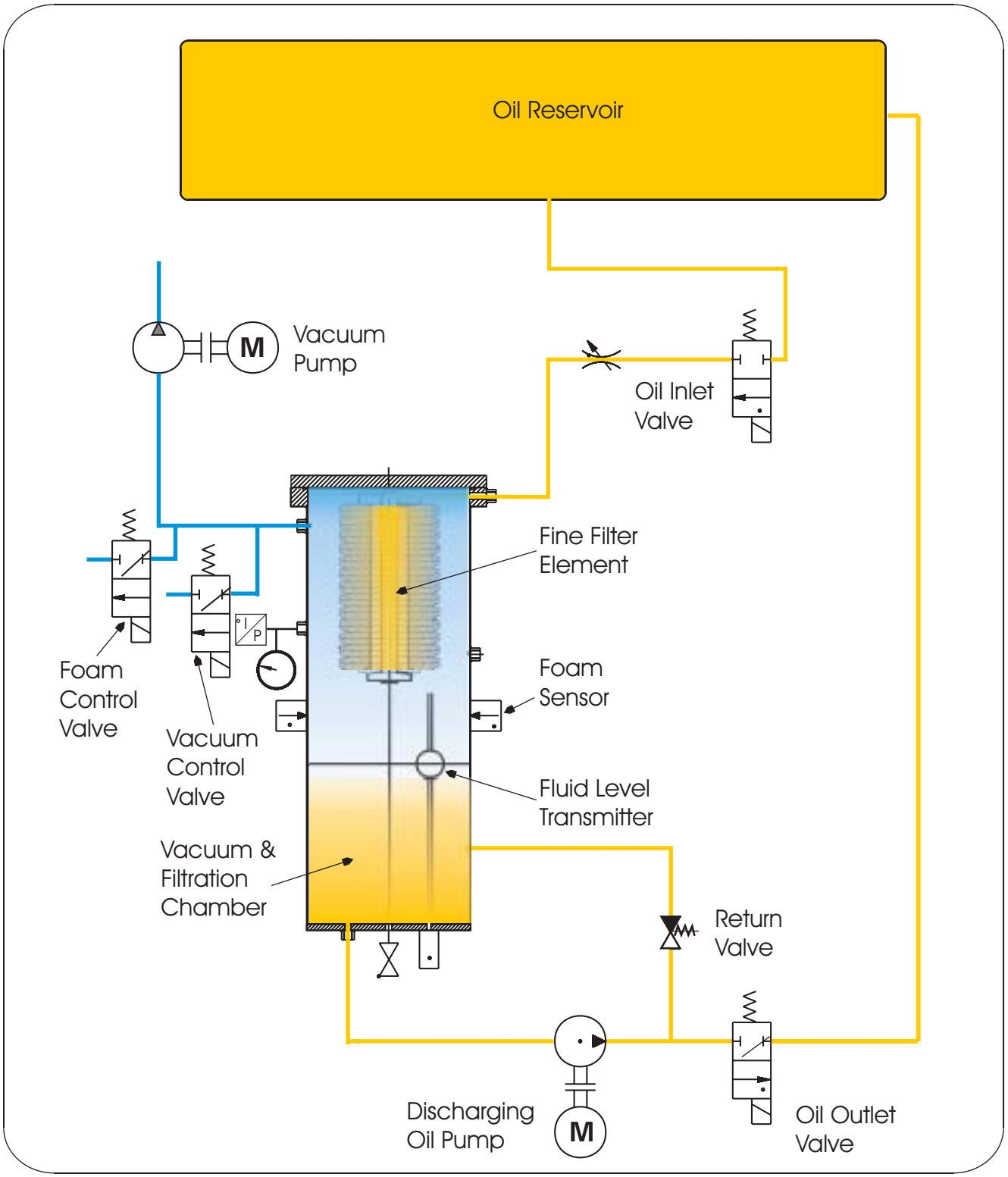

Part no.: FA9205003

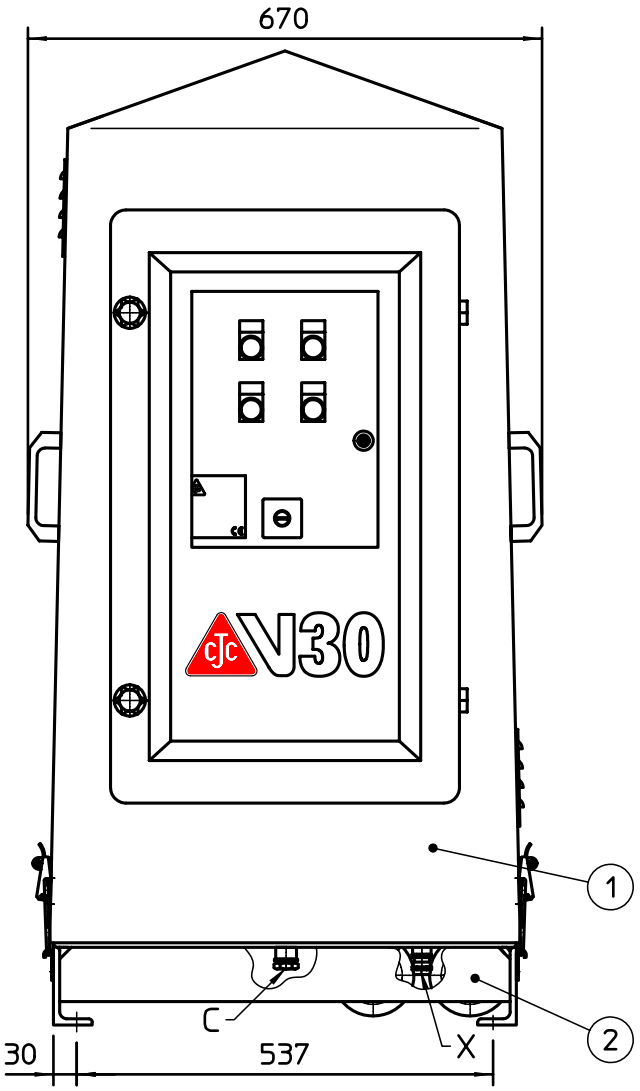

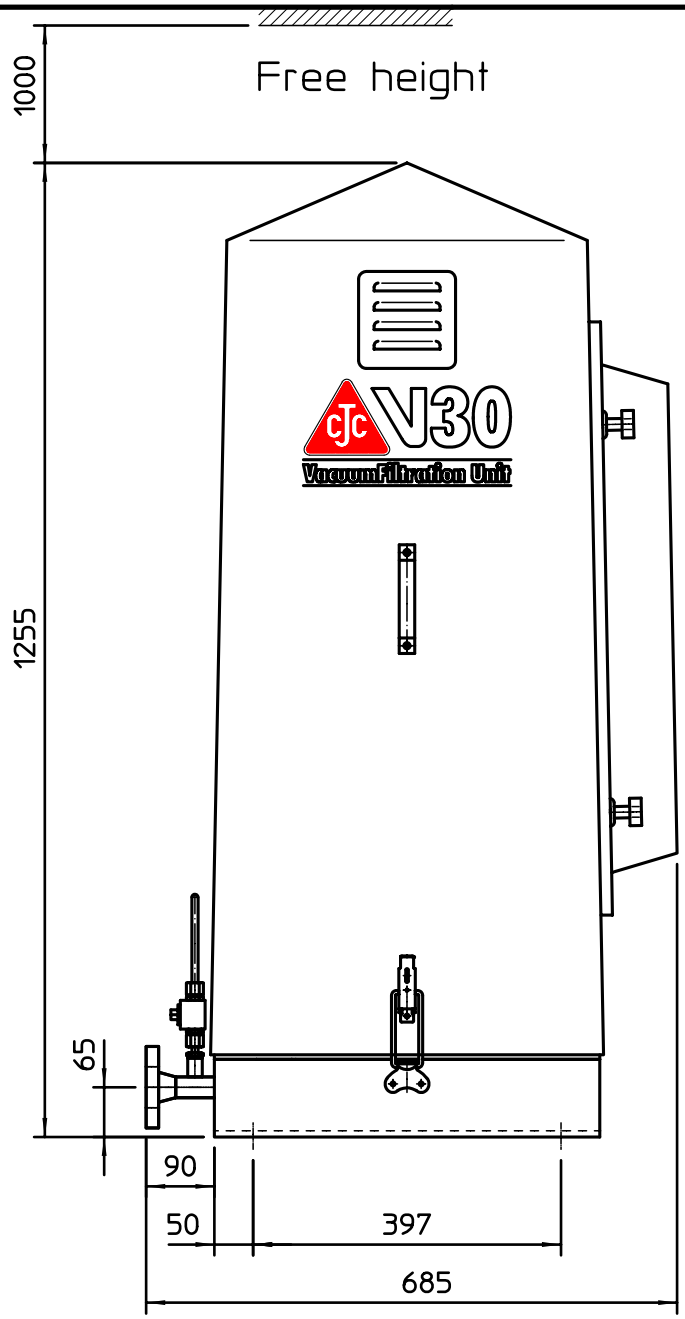

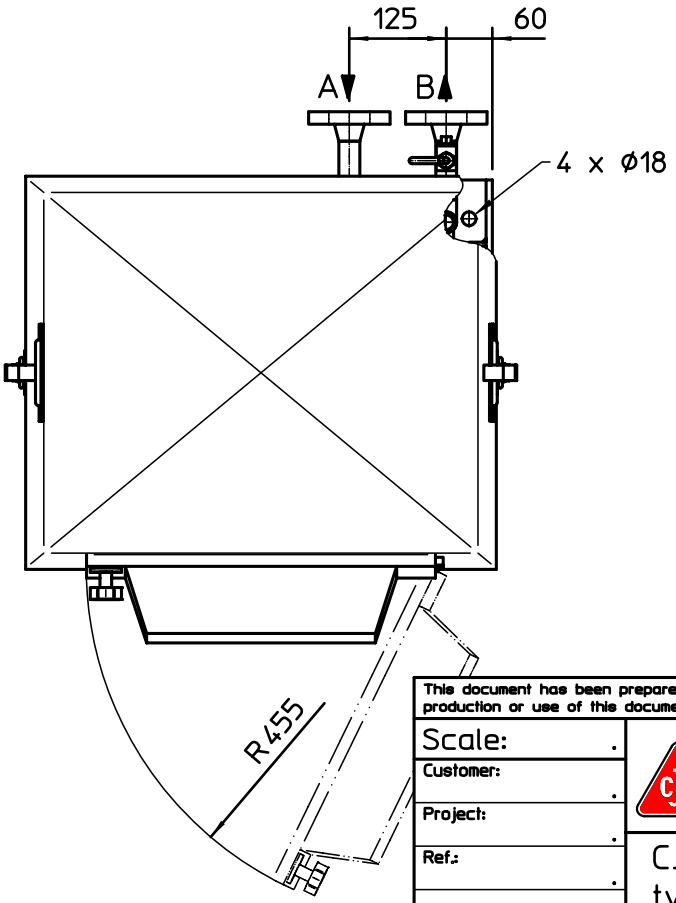

Design pressure 4 bar
Design temp. 80°C
Weight: 150 kg

A = DN20, Oil inlet
B = DN20, Oil outlet
C = 1/2" BSP Drain plug
X = Cable entry 8-13mm

Flanges DIN 2501 PN16

This document has been prepared by C.C. Jensen A/S of Svendborg, Denmark, and remains the property of the company. Reproduction or use of this document without the consent of C.C.Jensen A/S or its subsidiaries is prohibited. All rights reserved.

Scale: .
Customer: .
Project: .
Ref.: .

C.C.JENSEN A/S
LØVHOLMEN 13, DK-5700 SVENDBORG, DENMARK
FAX NO +45 62 22 46 15 PHONE +45 63 21 20 14

CJC Vacuum Filter
type V30
General Arrangement

	Sign	Date
Constr.	TIK	01.05.04
Drawn	kea	01.05.04
Appr.		
Rev. 1	.	.

Drawing no. 92 050 03-6

Västerås PetroleumKemi AB
Det OBEROENDE alternativet för industrins analys, service och konsultbehov

Provnr: 56588
Datum: 2001-03-06

2840698 Skallböle T1

Tillverkningsnr:	2840698
Apparatlittera:	Skallböle T1
Tillverkare:	ASEA
Leveransår:	1948
Maskintyp:	Transformator
Effekt:	15
Högspänning:	130
Lågspänning:	6
Oljevikt:	14800
Totalvikt:	
Kärnans vikt:	
Lindningsvikt:	
Kylsystem:	ONAF
Expansionssystem:	Öppet
Lindnings_alt_Lastkopplare:	uppg saknas
Tillverkare_LK:	Uppgift saknas
Typbeteckning:	TET7509
Isolerolja:	Okänd

Kund/Purchaser
Sydkraft Vattenkraft AB

Box 850
857 40 Sundsvall

Godkänd av/Approved by
AR

Er Referens/Your Reference
Vesa Hartikainen

Oljeanalys

	56588	56425	56412	56394	55357	
Ankomstdatum	2001-02-28	2001-02-12	2001-02-05	2001-01-29	2000-06-14	
Provtagningsdatum	2001-02-27	2001-02-09	2001-02-02	2001-01-25	2000-06-07	
Hydrogen H2:	<10	<10	14	1	65	ppm_vol@NTP
Oxygen O2:	580	1000	4750	16400	19600	ppm_vol@NTP
Nitrogen N2:	8700	9500	15000	62200	65700	ppm_vol@NTP
Metan CH4:	<1	1	1.3	4.3	6.3	ppm_vol@NTP
Kolmonoxid CO:	39	60	85	530	660	ppm_vol@NTP
Koldioxid CO2:	710	1325	>5300	8400	7320	ppm_vol@NTP
Eten C2H4:	2	6.9	8.6	11	9.7	ppm_vol@NTP
Etan C2H6:	2	3.1	3.7	3.8	6.2	ppm_vol@NTP
Etyn C2H2:	0.05	0.02	<0.01	0.5	0.02	ppm_vol@NTP
Karbonylsulfid COS:	2	6.1	3.3	1.2		ppm_vol@NTP
Brännbara gaser:	8.34	15.0	27.6	20.8	88.2	ppm_vol@NTP
CH4/H2:	0.20	0.25	0.093	4.3	0.095	
C2H6/CH4:	2.15	3.1	2.85	0.88	0.98	
C2H4/C2H6:	1.06	2.23	2.32	2.95	1.56	
C2H2/C2H4:	0.028	0.003	0.001	0.045	0.002	
CO2/CO:	18.2	22.1	62.4	15.9	11.1	
N2/O2:	14.9	9.23	3.16	3.79	3.35	
Jämviktstryck 0° C:	189	298	999		1980	mbar
Jämviktstryck 20° C:	178	270	868		1852	mbar
Jämviktstryck 50° C:	169	244	734		1733	mbar
Gashalt i olja (NTP):	1.01	1.20	2.52	8.75	9.34	%vol@NTP
Avgasning påbörjad:	01-01-25			01-01-25		datum
Avgasning avslutad:	ber 02-01-31			ber 02-01-31		datum

Analyskommentarer:

Minskande gashalter.

Adress huvudkontor
Bigarråvägen 2
435 43 PIXBO
Telefon 031-3381980
Telefax 031-3381774

Adress Laboratoriet
Box 189
721 05 Västerås
Telefon 021-198017
Telefax 021-181980
Mobiltelefon 070-7982051

Västerås PetroleumKemi AB
Det OBEROENDE alternativet för industrins analys, service och konsultbehov

Provnr: 56625
Datum: 2001-03-13

70108 BRT Trf1

Tillverkningsnr:	70108
Apparatlittera:	BRT Trf1
Tillverkare:	BRUSH
Leveransår:	1968
Maskintyp:	Transformator
Effekt:	20
Högspänning:	30
Lågspänning:	10
Tillverkningsnummer_LK:	
Oljevikt:	7580
Totalvikt:	
Kärnans vikt:	
Lindningsvikt:	
Kylsystem:	ONAF
Expansionssystem:	Gemensamt
Lindnings_alt_Lastkopplare:	FBA31333/500
Tillverkare_LK:	Fuller Electric Ltd
Typbeteckning:	
Isolerolja:	Okänd

Kund/Purchaser
Köbenhavns Energie
ELB
Hulgårdsvej 133
240 00 Köpenhamn

Godkänd av/Approved by

Er Referens/Your Reference
Thomas M Andersen

Gasanalys

	56625	56624	56423	56422	56414	
Ankomstdatum	2001-03-06	2001-03-06	2001-02-12	2001-02-12	2001-02-02	
Provtagningsdatum	2001-03-02	2001-03-02	2001-02-09	2001-02-09	2001-01-31	
Hydrogen H2:	<10	<10	15	20	30	ppm_vol@NTP
Oxygen O2:	1150	720	17000	19200	14300	ppm_vol@NTP
Nitrogen N2:	5550	5300	47100	48400	44400	ppm_vol@NTP
Metan CH4:	0.4	0.8	12	3.5	1.7	ppm_vol@NTP
Kolmonoxid CO:	15	18	125	130	110	ppm_vol@NTP
Koldioxid CO2:	325	375	4180	4290	4500	ppm_vol@NTP
Eten C2H4:	0.5	0.7	8.5	7.7	8	ppm_vol@NTP
Etan C2H6:	<0.1	<0.1	0.4	0.4	0.4	ppm_vol@NTP
Etyn C2H2:	0.4	0.6	7.9	7.3	4.9	ppm_vol@NTP
Karbonylsulfid COS:	3.1	1.3	7.6	5.4	16	ppm_vol@NTP
Brännbara gaser:	9.4	8.2	45.8	40.9	43	ppm_vol@NTP
CH4/H2:	0.05	0.13	0.71	0.16	0.061	
C2H6/CH4:	0.23	0.1	0.033	0.12	0.25	
C2H4/C2H6:	5.56	8.75	21.3	18.8	18.6	
C2H2/C2H4:	0.8	0.86	0.93	0.95	0.61	
CO2/CO:	21.7	20.9	33.4	33	41.2	
N2/O2:	4.84	7.45	2.77	2.53	3.11	
Jämviktstryck 0° C:	114	113		1370	1284	mbar
Jämviktstryck 20° C:	111	108		1309	1211	mbar
Jämviktstryck 50° C:	109	105		1256	1144	mbar
Gashalt i olja (NTP):	0.70	0.65	6.84	7.21	6.34	%vol@NTP

Analyskommentarer:

Avgasaren fungerar på avsett vis. Vv ange antalet omsättningar samt antal kopplingar på viklingskopplaren.

Återföres avgasad olja till botten? Om så är fallet är provet ifrån botten i princip ett prov ifrån avgasaren.

Ett rättvisande prov skall tas på avgasarens ingångssida eller ifrån trafons kylkrets.

Adress huvudkontor
Bigarråvägen 2
435 43 PIXBO
Telefon 031-3381980
Telefax 031-3381774

Adress Laboratoriet
Box 189
721 05 Västerås
Telefon 021-198017
Telefax 021-181980
Mobiltelefon 070-7982051